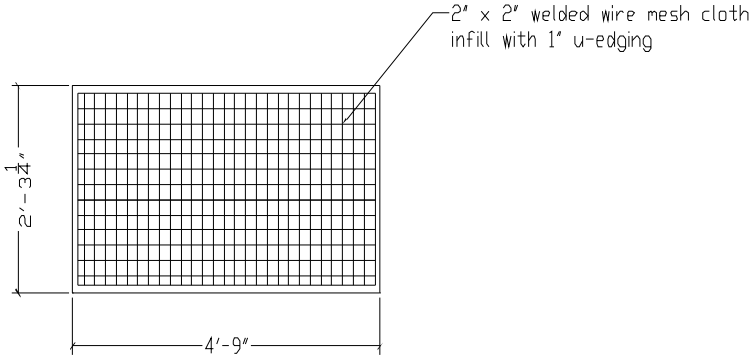

INFILL PANEL

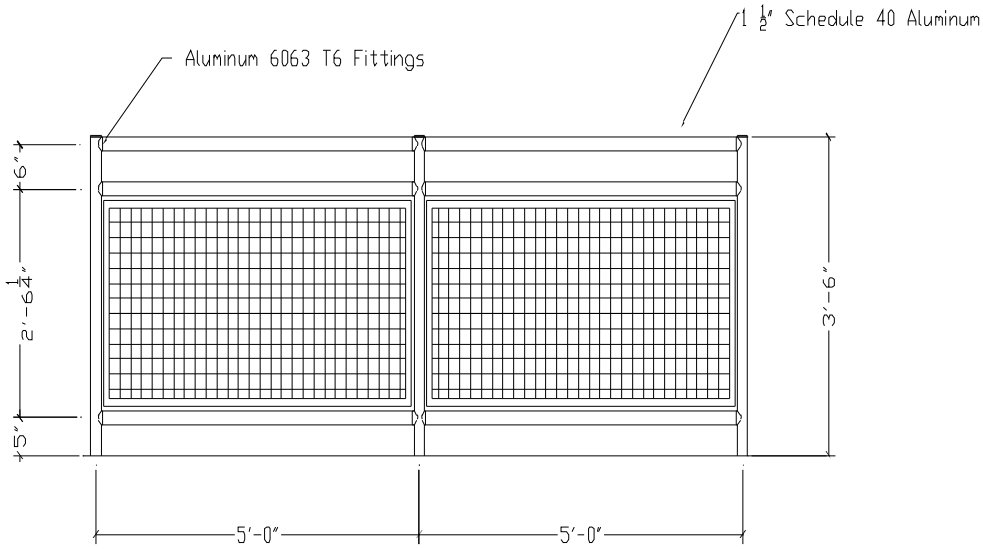

3 LINE ALUMINUM RAIL WITH INFILL

THIS DRAWING AND ALL THE INFORMATION THEREON IS THE PROPERTY OF THE IDEAL SHIELD, IS CONFIDENTIAL AND MUST NOT BE MADE PUBLIC, NOR COPIED, NOR USED, TO THE DISADVANTAGE OF SAID IDEAL SHIELD AND IS SUBJECT TO RETURN ON DEMAND.

COPYRIGHT 2003 .
IDEAL SHIELD®

NO.	REVISIONS	DATE	APPROVED

idealSHIELD®
2525 Clark St.
Detroit, MI 48209

PROJECT	CUSTOMER	DESCRIPTION

DRAWN BY:	APPROVED BY:	DATE:
PROJECT NO. –		SCALE:
FINISH:		DRAWING NO:
MATERIAL:		SHEET 1 OF 1